MST BELT DRIVE PARTS LIST

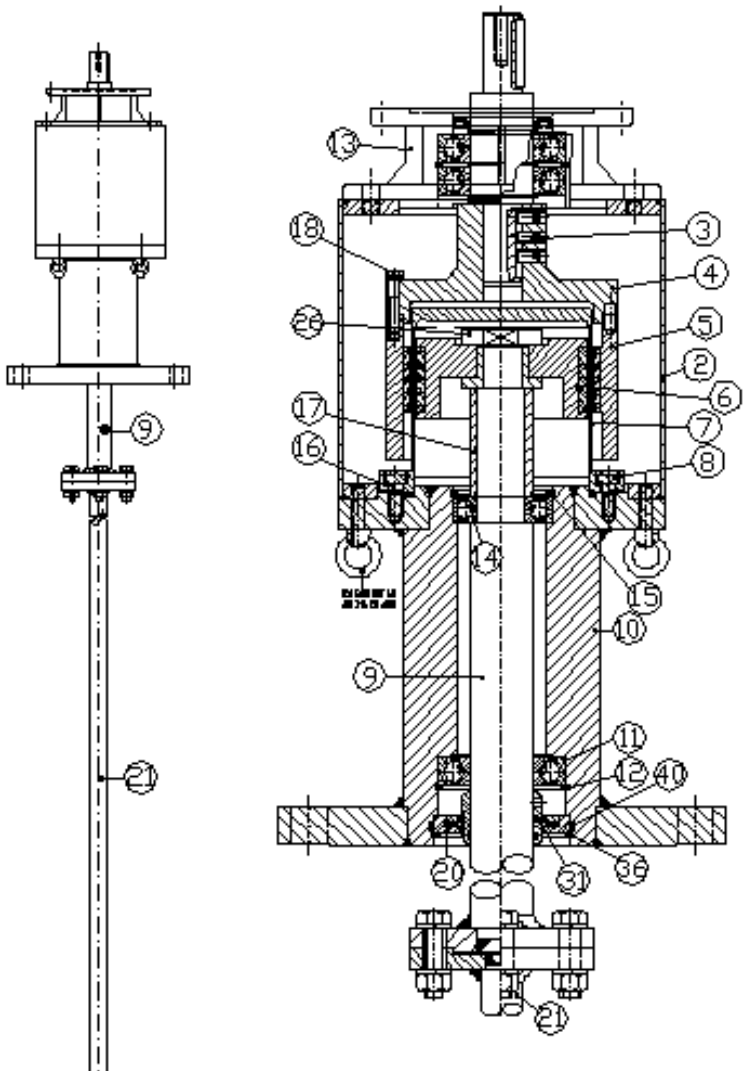

Part No.	Description
2	Magnet Housing
3	Stop Screw
4	Coupling
5	Outer Rotor
6	Inner Rotor
7	Shroud
8	Cap Screw
9	Shaft
10	Bearing Housing
11	Lower Bearing
12	Circlip
13	Adapter
14	Upper Bearing
15	Circlip
16	O'Ring
17	Spacer
18	Hex Screw
20	Lip Seal
21	Shaft
26	Screw
31	O'Ring with Sleeve
36	Circlip
40	O'Ring